REVISION HISTORY		
REV	DATE	ECN
-	06/16/25	25-0918

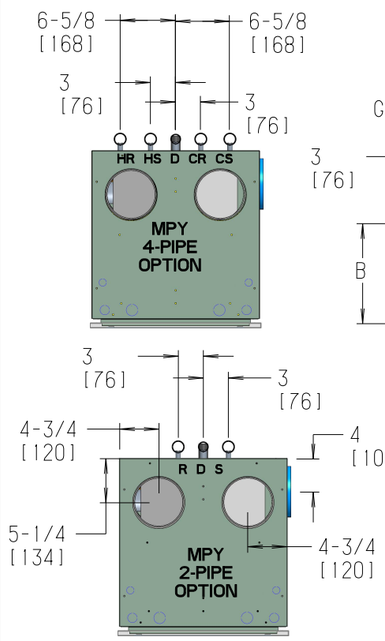

NOTES:
A. UNITS GALV STEEL WITH 16 GA FAN DECK
B. ALL RISER INSULATED
C. THERMOSTATS SHIPPED LOOSE FOR FIELD INSTALLATION
D. RISERS ARE FACTORY PIPED TO COIL WITH VALVES AS SPECIFIED.
E. BLOWER,MOTOR,VALVES, COIL, AND FILTER ARE ACCESIBLE THROUGH THE RETURN AIR OPENING.
F. UNIT AND CNTL BOX ARE INSULATED
G. RISER LENGTH=[(FLOOR TO FLOOR) +2"(51)] MAX RISER LENGTH =119"(3023) CONSULT RISER SUBMITTALS FOR SPECS
H. MAX RISER DIAM IS 2-1/2"(64). IF LARGER DIAMATERS ARE REQUIRED, CONSUL THE FACTORY.
I. EXPANSION LOOPS IN HOT WATER HEATING CIRCUITS AS REQUIRED
J. SLOTS PROVIDED IN THE BACK PANEL FOR COIL CONNECTION TO PERMIT EXPANSION AND CONTRACTION OF RISERS. COIL CONNECTIONS TO BE AT THE CENTER OF THE SLOTS.
K. SEE UNIT ARRANGEMENTS FOR SUPPLY AND RETURN AIR ORIENTATION.
L. DIMENSIONS ARE IN INCHES, DIMS IN ( ) ARE IN MM
M. ERV MODS ARE ONLY AVAILIBLE IN FRONT AND TOP SUPPLY OPTIONS.
N. UPSHIFTING IS NOT ALLOWED WITHOUT INCREASING THE HEIGHT OF THE UNIT PROPORTIONALY (PLEASE CONSULT APPLICATION ENGINEERING FOR OTHER RESTRICTIONS)
O. SIZE 03/04 UNITS ARE UPSIZED TO 20x20 INCHES (SIZE 06/08 SIZE)
P. ENERGY RECOVERY VENTILATOR UNIT(ERV)

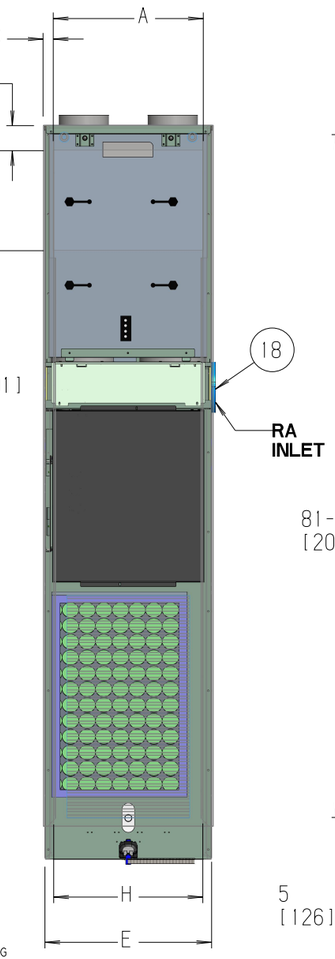

FRONT VIEW

RISERS REMOVED & DECO PANEL DIMMED FOR CLARITY PURPOSE

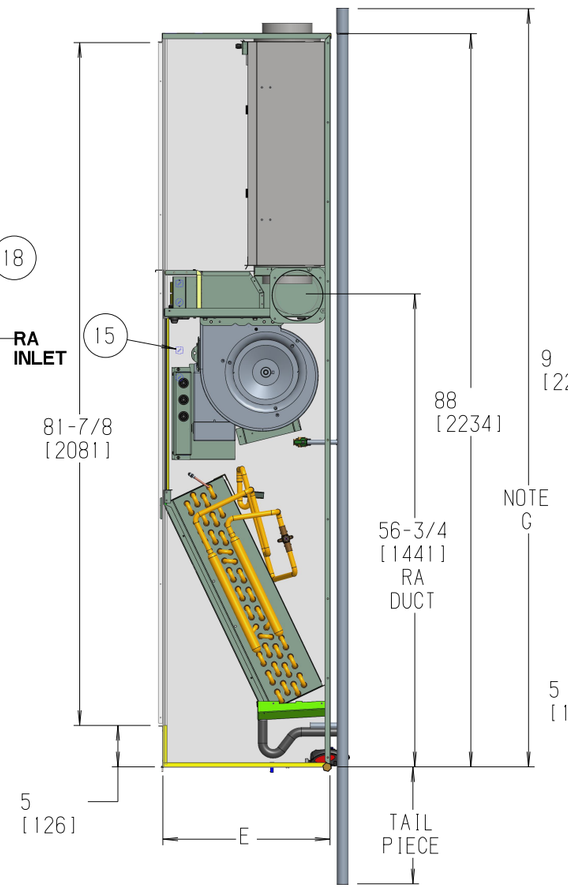

SIDE VIEW

DECO PANEL & SIDE PANEL DIMMED FOR CLARITY PURPOSE

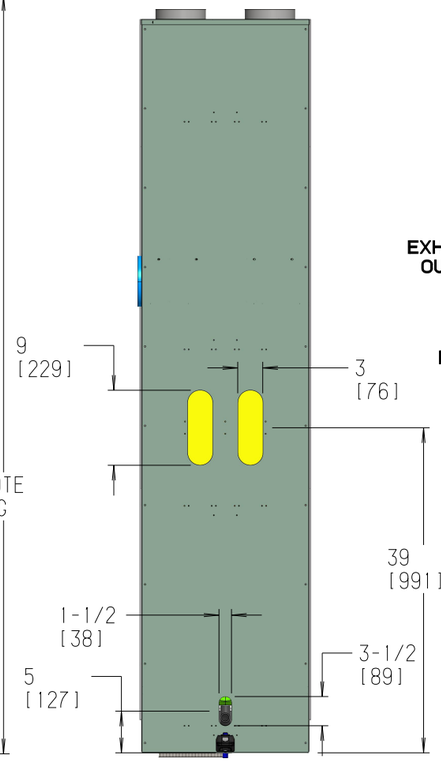

2 PIPE PANEL SHOWN

RISERS REMOVED FOR CLARITY STANDARD HEIGHTS AND WIDTHS SHOWN FOR RISER PENETRATION SEE NOTE J

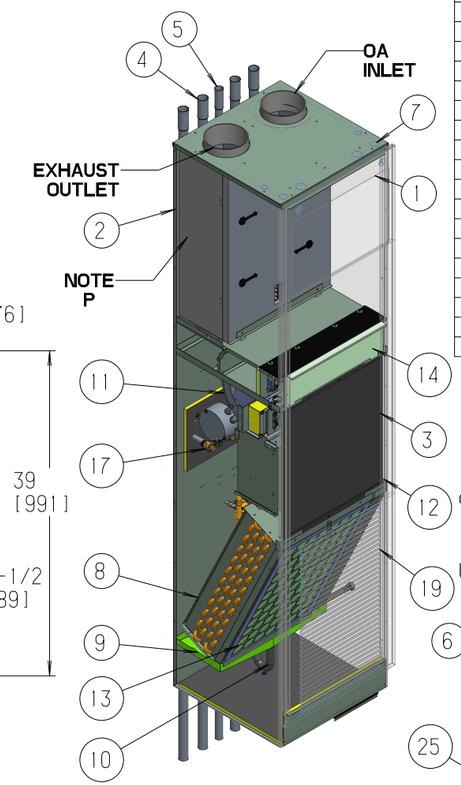

SIDE PANEL REMOVED & DECO PNL DIMMED FOR CLARITY PURPOSE

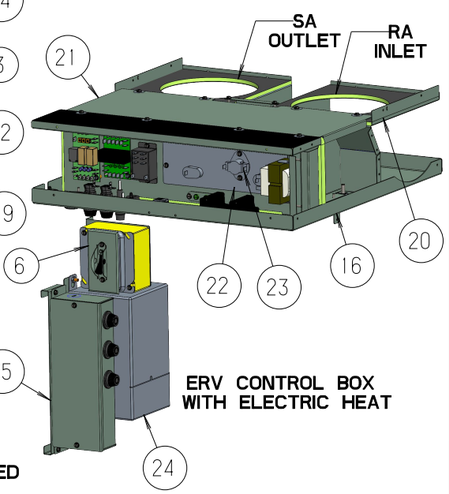

ERV CONTROL BOX WITH ELECTRIC HEAT

ITEM	DESCRIPTION
1	SUPPLY OPENING
2	ERV (ENERGY RECOVERY VENTILATOR)
3	RA ACOUSTICAL SVC PANEL
4	RISER, SUPPLY & RETURN
5	RISER, DRAIN
6	SERV SW ASSY 40 AMPS DP
7	ELECTRICAL KNOCK OUTS
8	COIL 1/2"(13) O.D.
9	DOUBLE SLOPED DRAIN PAN
10	FLEX DRAIN TUBE/P-TRAP
11	MOTOR/BLOWER HOUSING
12	RETURN AIR OPENING
13	FILTER, THROWAWAY,1"(25)
14	ACCESS PANEL (CONTROL BOX)
15	KNOCKOUT (OPTIONAL REMOTE MNT)
16	CONTROL BOX
17	1/2"(13)ISOLATION VALVE
18	DUCT PLT 6IN 6.6 SW
19	DECO PANEL FOR ERV
20	AIR BAFFLE
21	HEAT SHIELD
22	STRIP HEATER (OPTIONAL E HEAT)
23	HEAT LIMIT SWITCH (OPTIONAL E HEAT)
24	LV TRANSFORMER
25	FUSE BOX

Unit Model	Dimensions - Inches (Millimieters)									
	FRONT SUPPLY			TOP SUPPLY			DIMENSIONS			FILTER SIZE
	A	B	SIZE	C	D	SIZE	E	G	H	
MPY 03/04 (UPSZ)	18 (457)	10 (254)	18X10	16 (406)	8 (203)	16X8	20 (508)	1 (25)	18 (457)	12-1/2 X 24-1/4 X 1(318 X 616 X 25)
MPY 03/04 (2UPSZ)	22 (559)	6 (152)	22X6	16 (406)	8 (203)	16X8	24 (610)	1 (25)	22 (559)	12-1/2 X 24-1/4 X 1(318 X 616 X 25)
MPY 06/08	18 (457)	12 (305)	18X12	16 (406)	8 (203)	16X8	20 (508)	1 (25)	18 (457)	16-1/4 X 26-3/4 X 1(413 X 679 X 25)
MPY 06/08 (UPSZ)	22 (559)	10 (254)	22X10	16 (406)	8 (203)	16X8	24 (610)	1 (25)	22 (559)	16-1/4 X 26-3/4 X 1(413 X 679 X 25)
MPY 10/12	22 (559)	16 (406)	22X16	20 (508)	12 (305)	20X12	24 (610)	1 (25)	22 (559)	20-1/2 X 29-1/4 X 1(521 X 743 X 25)

IEC International Environmental

TITLE: MPY UNIT W/ERV

DWG NO: 1100-90065452 | REV: -

DRAWN	DATE	APPROVED	DATE
J. FUSON	02/28/22	M. SMITH	02/28/22